ALI15013

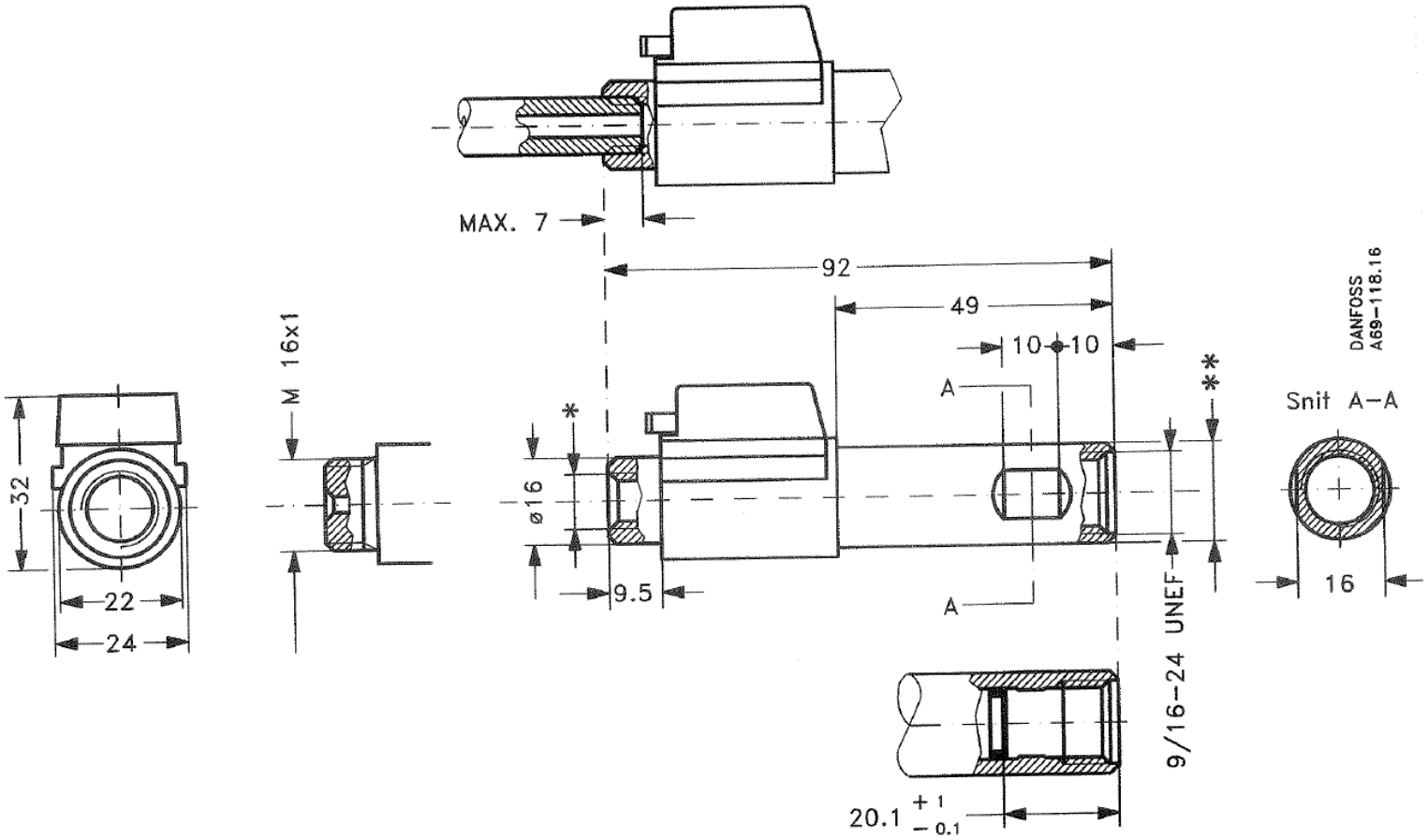
MAX. 7
92
49
10
10
A
A
*
**
ø16
9.5
M 16x1
32
22
24
9/16-24 UNEF
20.1 +1 -0.1
Snit A-A
16
DANFOSS
A69-118.16